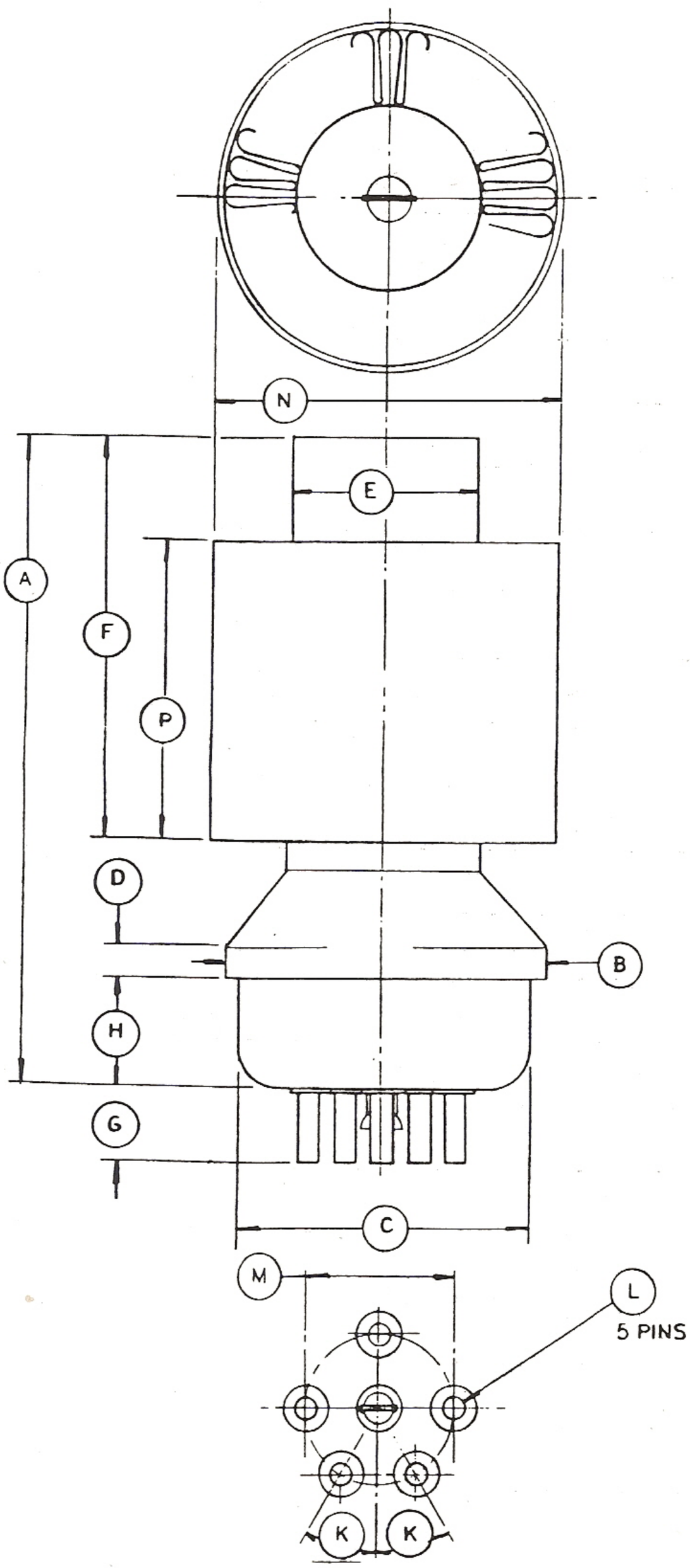

DIMENSIONAL DATA						
	INCHES			MILLIMETERS		
DIM	MIN	MAX	REF	MIN	MAX	REF
A		5.400			137.16	
B			2.750			67.4
C			2.500			63.5
D			.312			7.65
E			1.500			36.75
F			3.375			82.7
G	.700	.800		17.15	19.6	
H			.937			22.95
K			30°			30°
L	.185	.191		4.53	4.68	
M			1.250			30.63
N			2.875			70.44

NOTES:

1. REF DIMENSIONS ARE FOR INFO ONLY & ARE NOT REQUIRED FOR INSPECTION PURPOSES.